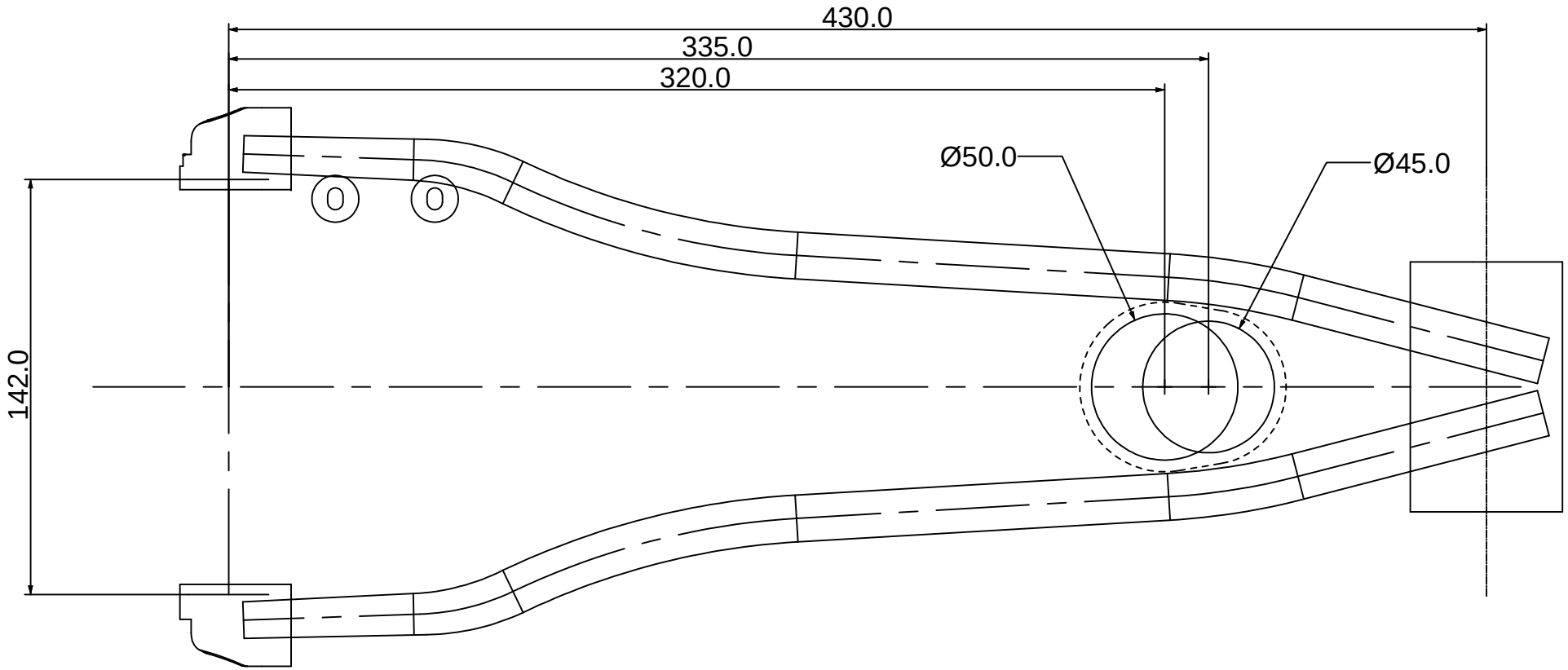

Dedaindustrie s.r.l.
via Leonardo da Vinci 19
26013 Campagnola Cremasca (CR) - ITALY

Release	01/22	Date	21/01/22

Ref. N°	Date	Description
Measure	mm	Scale
Material	25CrMo4 STEEL	
Name	GRAVEL C/S ASSEMBLY	
Drawing N°	MPO240C2026	

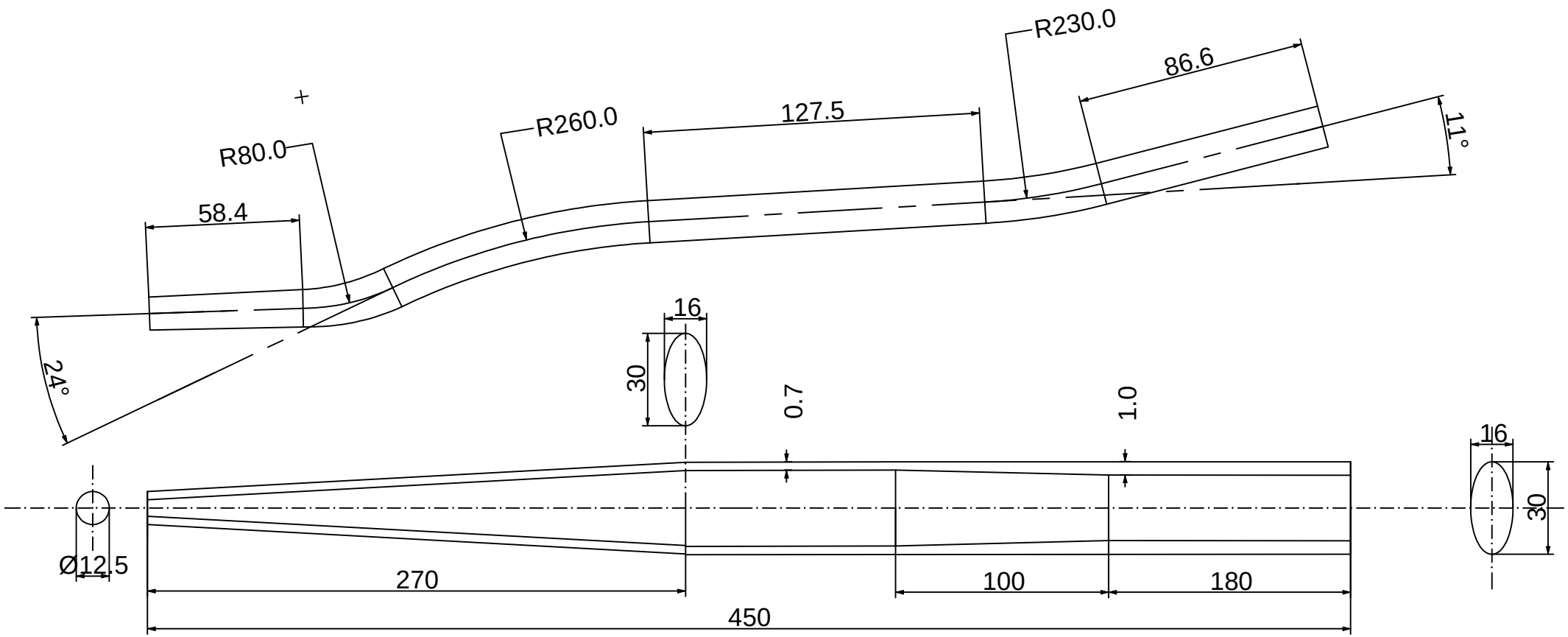

Dedaindustrie s.r.l.
via Leonardo da Vinci 19
26013 Campagnola Cremasca (CR) - ITALY

Release	01/22	Date	21/01/22

Ref. N°	Date	Description
Measure	mm	Scale
Material	25CrMo4 STEEL	
Name	GRAVEL C/S	
Drawing N°	MPO240C2026	